Project Manager: Puneet Bhasin
Email: puneet@artlinegroup.com

La Quinta: Dusk till Dawn

Tag	: GB - 100 - ART
Item Description	: Artwork
Item Location	: Guest Bathroom
Image Code	: 101430511s
Overall Size	: 18” w x 18” h
Image size	: 11.5” w x 11.5” h
Matting	: 2”
Frame	: 1.25” w

Note:

_____

_____

Qty.:

_____

Project Manager: Puneet Bhasin
Email: puneet@artlinegroup.com

La Quinta: Dusk till Dawn

Tag : GR - 100 - ART

Item Description : Artwork - Regional City Skyline

Item Location : Guestroom @ Bathwall

Image Code : Regional per Property Location

Dimension : 72” w x 18” h

Material : Gallery Wrap Canvas

Note:

_____

_____

Qty.:

_____

Project Manager: Puneet Bhasin
Email: puneet@artlinegroup.com

La Quinta: Dusk till Dawn

Tag	: GR - 101 - ART
Item Description	: Artwork @ Suites
Item Location	: Guestroom
Image Code	: 1172936028s
Overall Size	: 36” w x 18” h
Image Size	: 30” w x 12” h
Matting	: 2“ white
Frame	: 1.25”

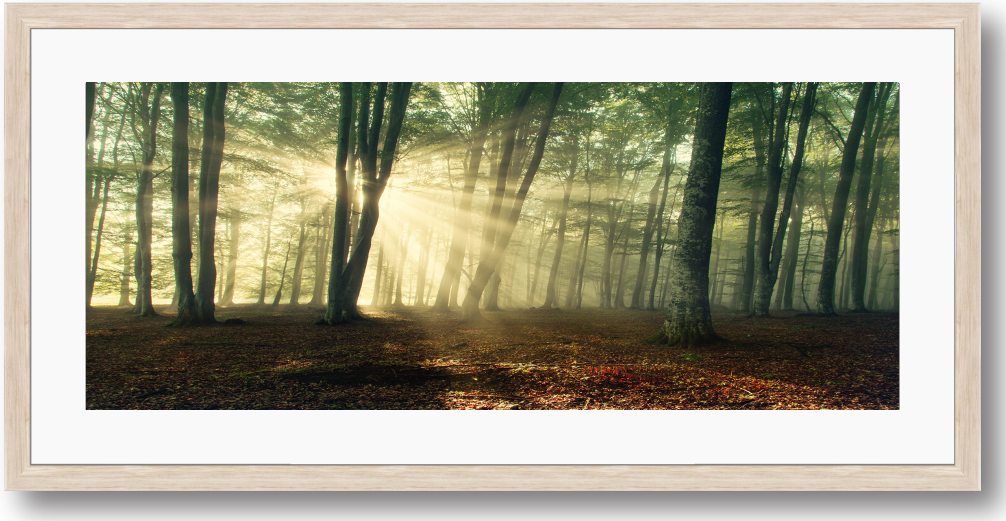

Note:

_____

_____

Qty.:

_____

Project Manager: Puneet Bhasin
Email: puneet@artlinegroup.com

La Quinta: Dusk till Dawn

Tag	: WC - 01
Item Description	: Mural @ Headboard Wall
Material	: Suede Wall Covering
Image Code	: WC-TRIPAT 01
Dimension	: 160” w x 108” h

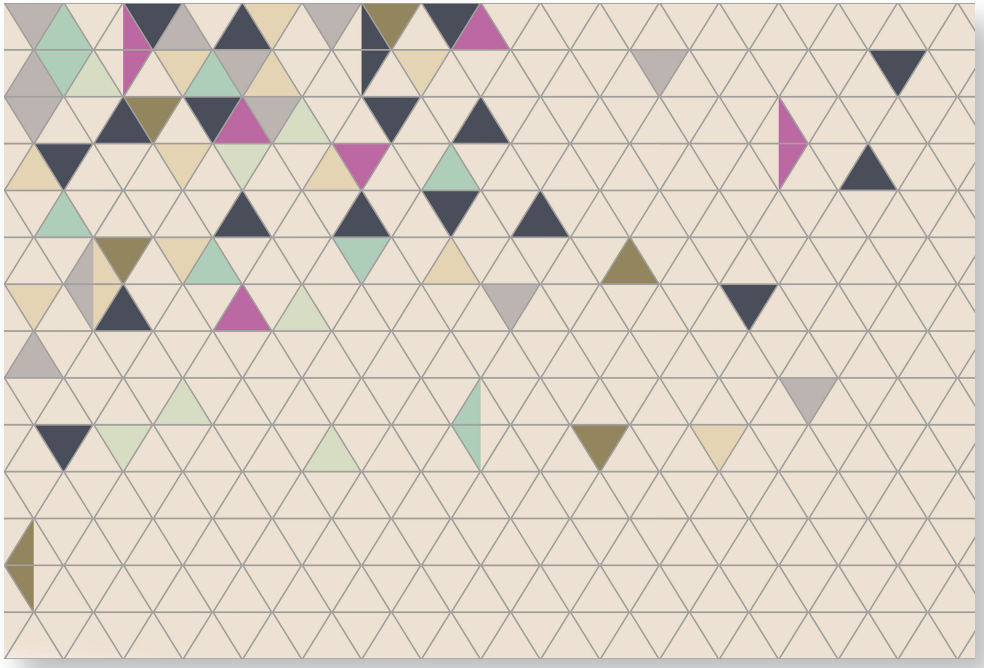

Note:

_____

_____

Qty.:

_____

Project Manager: Puneet Bhasin
Email: puneet@artlinegroup.com

La Quinta: Dusk till Dawn

Tag	: GB - 600 - MR
Item Description	: Backlit Mirror
Item Location	: Guest Bathroom
Item Code	: LM4WGD-4836-3K / 3648-3K
Dimension	: 48” w x 36” h
Diffuser Included	: Yes
Color Temp.	: 3000K
Lumens	: 8640.00
Plug or Hardware	: Plug
Add’l. Item info.	: 4 Sided LED Mirror with Frosting to the Edge (WG), Double Strips, Orientation can be changed

Note:

_____

_____

Qty.:

_____

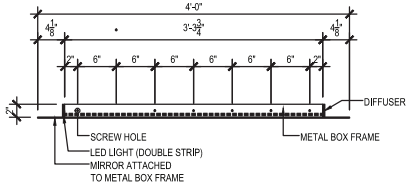

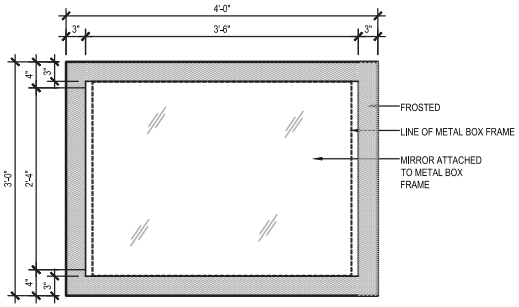

Project Manager: Puneet Bhasin
Email: puneet@artlinegroup.com

La Quinta: Dusk till Dawn

Tag	: GB - 600 - MR ADA
Item Description	: Backlit Mirror
Item Location	: ADA Guest Bathroom
Item Code	: LM2WGD-3636-3K
Dimension	: 36” w x 36” h
Diffuser Included	: Yes
Color Temp.	: 3000K
Lumens	: 3192.00
Plug or Hardware	: Plug
Add’l. Item info.	: 2 Sided LED Mirror with Frosting to the Edge (WG), Double Strips

Note:

_____

_____

Qty.:

_____

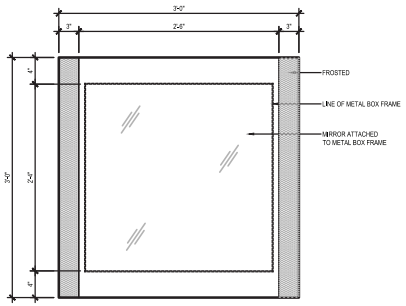

FRONT ELEVATION

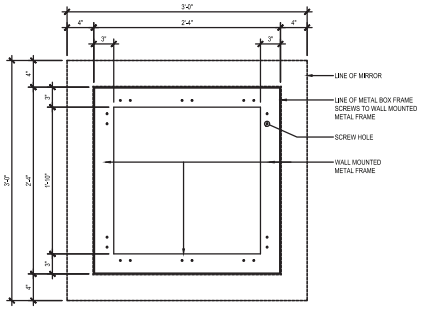

SECTIONAL FRONT ELEVATION

02 - FRONT ELEVATION (LM2WGD-3636-3K)
SCALE: 1 1/2" - 1'-0"

03 - SECTIONAL FRONT ELEVATION (LM2WGD-3636-3K)
SCALE: 1 1/2" - 1'-0"

ARTLINE GROUP
Project Manager: Puneet Bhasin
Email: puneet@artlinegroup.com

La Quinta: Dusk till Dawn

Tag	: CORR - 100 - ART - A
Item Description	: Artwork @ Elevator Landing
Item Location	: Corridor
Image or Text	: G
Dimension	: 48” w x 60” h
Orientation	: Vertical
Material	: 1/4“ Mirror with Vinyl Safety Backing Printed with Pantone 2985C

Note:

_____

_____

Qty.:

_____

Project Manager: Puneet Bhasin
Email: puneet@artlinegroup.com

La Quinta: Dusk till Dawn

Tag	: CORR - 100 - ART - B
Item Description	: Artwork @ Elevator Landing
Item Location	: Corridor
Image or Text	: 1
Dimension	: 48” w x 60” h
Orientation	: Vertical
Material	: 1/4“ Mirror with Vinyl Safety Backing Printed with Pantone 2985C

Note:

_____

_____

Qty.:

_____

Project Manager: Puneet Bhasin
Email: puneet@artlinegroup.com

La Quinta: Dusk till Dawn

Tag	: CORR - 100 - ART - C
Item Description	: Artwork @ Elevator Landing
Item Location	: Corridor
Image or Text	: 2
Dimension	: 48” w x 60” h
Orientation	: Vertical
Material	: 1/4“ Mirror with Vinyl Safety Backing Printed with Pantone 2985C

Note:

_____

_____

Qty.:

_____

Project Manager: Puneet Bhasin
Email: puneet@artlinegroup.com

La Quinta: Dusk till Dawn

Tag	: CORR - 100 - ART - D
Item Description	: Artwork @ Elevator Landing
Item Location	: Corridor
Image or Text	: 3
Dimension	: 48” w x 60” h
Orientation	: Vertical
Material	: 1/4“ Mirror with Vinyl Safety Backing Printed with Pantone 2985C

Note:

_____

_____

Qty.:

_____

Project Manager: Puneet Bhasin
Email: puneet@artlinegroup.com

La Quinta: Dusk till Dawn

Tag	: SF - 04
Item Description	: Acrylic with Metallic Branches
Item Location	: Inside Sliding door Material
Image Code	: 57383223d
Dimension	: 48“ x 96” Panels
Color	: Metallic
Material	: 1/4” Thk. Acrylic with Metallic Branches
Notes:	: To be cut and installed by door fabricator

Note:

_____

_____

Qty.:

_____

Project Manager: Puneet Bhasin
Email: puneet@artlinegroup.com

La Quinta: Dusk till Dawn

Tag	: SF - 13
Item Description	: Antique Mirror
Item Location	: at Reception
Product	: Custom
Color / Finish	: Antique Mirror
Dimension	: To be field verified

Note:

_____

_____

Qty.:

_____

Project Manager: Puneet Bhasin
Email: puneet@artlinegroup.com

La Quinta: Dusk till Dawn

Tag : WC - 12

Item Description : Regional City Map, Image created based on property location

Item Location : at Public Area

Image Code : TBD

Image Size : To be verified in Field

Material : Type II Wall Vinyl

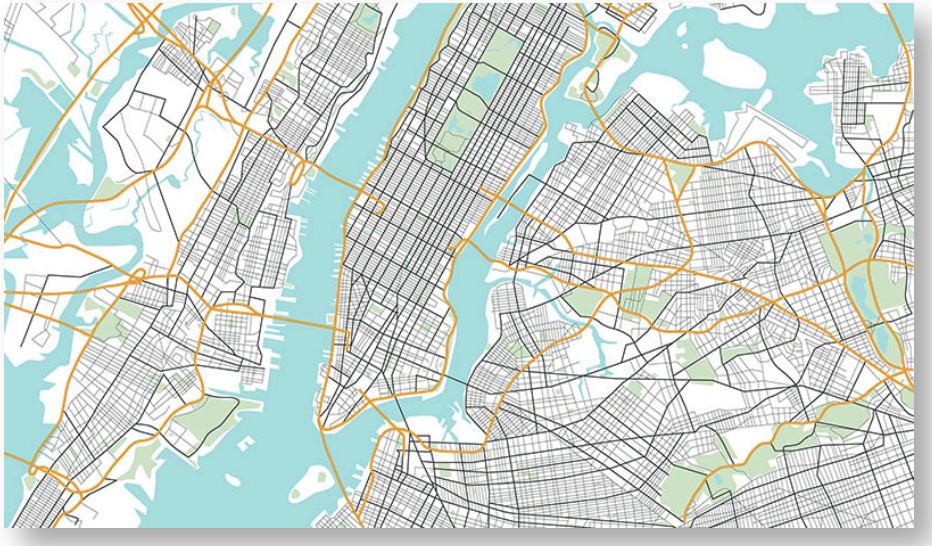

Note:

_____

_____

Qty.:

_____

Project Manager: Puneet Bhasin
Email: puneet@artlinegroup.com

La Quinta: Dusk till Dawn

Tag : PB - 600 - MR

Item Description : Backlit Mirror

Item Location : Public Bathroom

Item Code : LM4WGD-6036-3K
(4 Sided mirror with frosting to the edge)

Dimension : 60” w x 36” h

Diffuser Included : Yes
Color Temp : 3000K
Lumens : 8640.00
Plug or Hardware : Plug

Add’l. Item info. : 4 Sided LED Mirror with Frosting to the Edge (WG), Double Strips, Orientation can be changed

Note:

_____

_____

Qty.:

_____